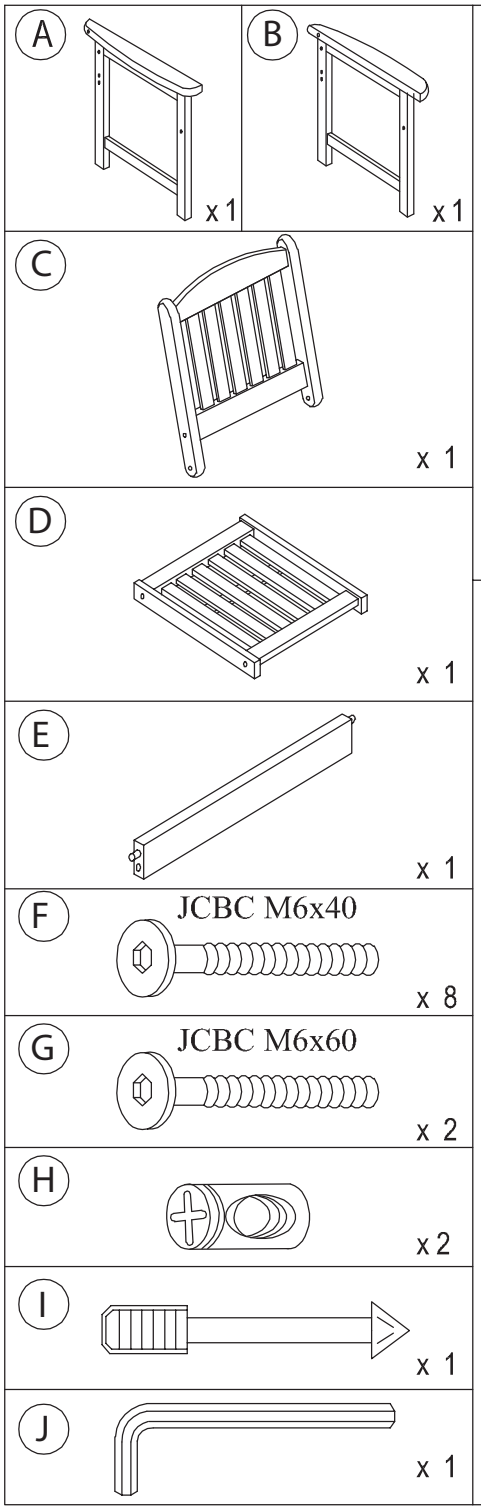
A
x 1
B
x 1
C
x 1
D
x 1
E
x 1
F
JCBC M6x40
x 8
G
JCBC M6x60
x 2
H
x 2
I
x 1
J
x 1

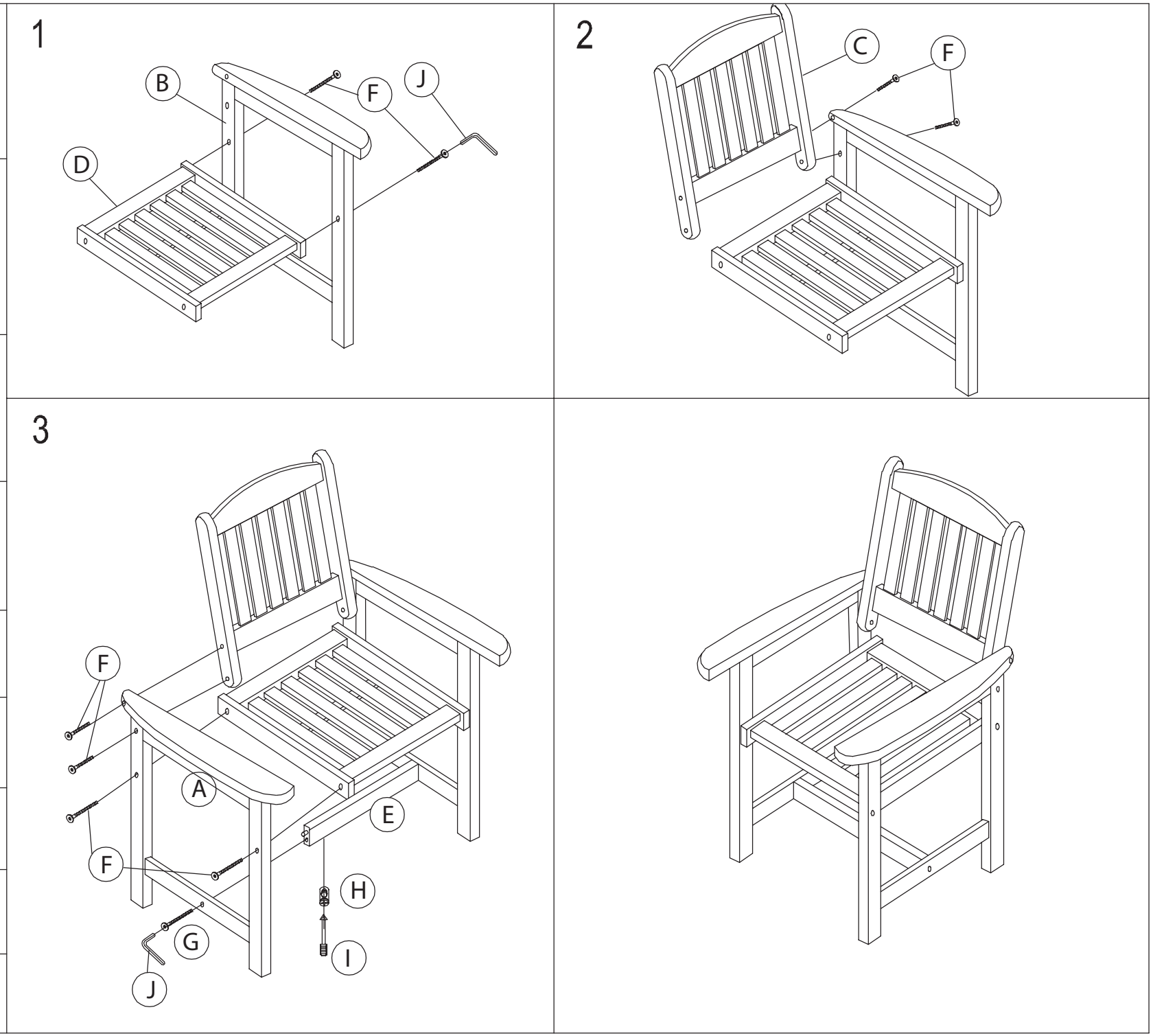
1
B
F
J
D
2
C
F
3
F
A
E
F
H
G
I
J